Cambridge Assessment International Education

# Cambridge International AS & A Level

CANDIDATE NAME

CENTRE NUMBER

CANDIDATE NUMBER

*0764358092*

**PHYSICS** **9702/22**

Paper 2 AS Level Structured Questions **February/March 2020**

**1 hour 15 minutes**

You must answer on the question paper.

No additional materials are needed.

**INSTRUCTIONS**

- Answer **all** questions.
- Use a black or dark blue pen. You may use an HB pencil for any diagrams or graphs.
- Write your name, centre number and candidate number in the boxes at the top of the page.
- Write your answer to each question in the space provided.
- Do **not** use an erasable pen or correction fluid.
- Do **not** write on any bar codes.
- You may use a calculator.
- You should show all your working and use appropriate units.

**INFORMATION**

- The total mark for this paper is 60.
- The number of marks for each question or part question is shown in brackets [ ].

This document has **16** pages. Blank pages are indicated.


© UCLES 2020

**Data**

| | |
|---|---|
| speed of light in free space | $c = 3.00 \times 10^{8}\,\text{m s}^{-1}$ |
| permeability of free space | $\mu_0 = 4\pi \times 10^{-7}\,\text{H m}^{-1}$ |
| permittivity of free space | $\varepsilon_0 = 8.85 \times 10^{-12}\,\text{F m}^{-1}$ |
| | $(\frac{1}{4\pi\varepsilon_0} = 8.99 \times 10^{9}\,\text{m F}^{-1})$ |
| elementary charge | $e = 1.60 \times 10^{-19}\,\text{C}$ |
| the Planck constant | $h = 6.63 \times 10^{-34}\,\text{J s}$ |
| unified atomic mass unit | $1\,\text{u} = 1.66 \times 10^{-27}\,\text{kg}$ |
| rest mass of electron | $m_e = 9.11 \times 10^{-31}\,\text{kg}$ |
| rest mass of proton | $m_p = 1.67 \times 10^{-27}\,\text{kg}$ |
| molar gas constant | $R = 8.31\,\text{J K}^{-1}\,\text{mol}^{-1}$ |
| the Avogadro constant | $N_A = 6.02 \times 10^{23}\,\text{mol}^{-1}$ |
| the Boltzmann constant | $k = 1.38 \times 10^{-23}\,\text{J K}^{-1}$ |
| gravitational constant | $G = 6.67 \times 10^{-11}\,\text{N m}^2\,\text{kg}^{-2}$ |
| acceleration of free fall | $g = 9.81\,\text{m s}^{-2}$ |

© UCLES 2020

**Formulae**

| | |
|---|---|
| uniformly accelerated motion | $s = ut + \frac{1}{2}at^2$<br>$v^2 = u^2 + 2as$ |
| work done on/by a gas | $W = p\Delta V$ |
| gravitational potential | $\phi = -\frac{Gm}{r}$ |
| hydrostatic pressure | $p = \rho gh$ |
| pressure of an ideal gas | $p = \frac{1}{3}\frac{Nm}{V}\langle c^2 \rangle$ |
| simple harmonic motion | $a = -\omega^2 x$ |
| velocity of particle in s.h.m. | $v = v_0 \cos \omega t$<br>$v = \pm \omega \sqrt{(x_0^2 - x^2)}$ |
| Doppler effect | $f_o = \frac{f_s v}{v \pm v_s}$ |
| electric potential | $V = \frac{Q}{4\pi\varepsilon_0 r}$ |
| capacitors in series | $1/C = 1/C_1 + 1/C_2 + \ldots$ |
| capacitors in parallel | $C = C_1 + C_2 + \ldots$ |
| energy of charged capacitor | $W = \frac{1}{2}QV$ |
| electric current | $I = Anvq$ |
| resistors in series | $R = R_1 + R_2 + \ldots$ |
| resistors in parallel | $1/R = 1/R_1 + 1/R_2 + \ldots$ |
| Hall voltage | $V_H = \frac{BI}{ntq}$ |
| alternating current/voltage | $x = x_0 \sin \omega t$ |
| radioactive decay | $x = x_0 \exp(-\lambda t)$ |
| decay constant | $\lambda = \frac{0.693}{t_{\frac{1}{2}}}$ |

© UCLES 2020

**[Turn over**

Answer **all** the questions in the spaces provided.

**1** **(a)** Length, mass and temperature are all SI base quantities.

State **two** other SI base quantities.

1. .....

2. .....
[2]

**(b)** The acceleration of free fall $g$ may be determined from an oscillating pendulum using the equation

$$g = \frac{4\pi^2 l}{T^2}$$

where $l$ is the length of the pendulum and $T$ is the period of oscillation.

In an experiment, the measured values for an oscillating pendulum are

$l = 1.50\,\text{m} \pm 2\%$
and $T = 2.48\,\text{s} \pm 3\%$.

**(i)** Calculate the acceleration of free fall $g$.

$g =$ ..... $\text{m s}^{-2}$ [1]

**(ii)** Determine the percentage uncertainty in $g$.

percentage uncertainty = ..... % [2]

**(iii)** Use your answers in **(b)(i)** and **(b)(ii)** to determine the absolute uncertainty of the calculated value of $g$.

absolute uncertainty = ..... $\text{m s}^{-2}$ [1]

[Total: 6]

© UCLES 2020

**BLANK PAGE**

**2** A dolphin is swimming under water at a constant speed of $4.50\,m\,s^{-1}$.

**(a)** The dolphin emits a sound as it swims directly towards a stationary submerged diver. The frequency of the sound heard by the diver is 9560 Hz. The speed of sound in the water is $1510\,m\,s^{-1}$.

Determine the frequency, to three significant figures, of the sound emitted by the dolphin.

frequency = ..... Hz [2]

**(b)** The dolphin strikes the bottom of a floating ball so that the ball rises vertically upwards from the surface of the water, as illustrated in Fig. 2.1.

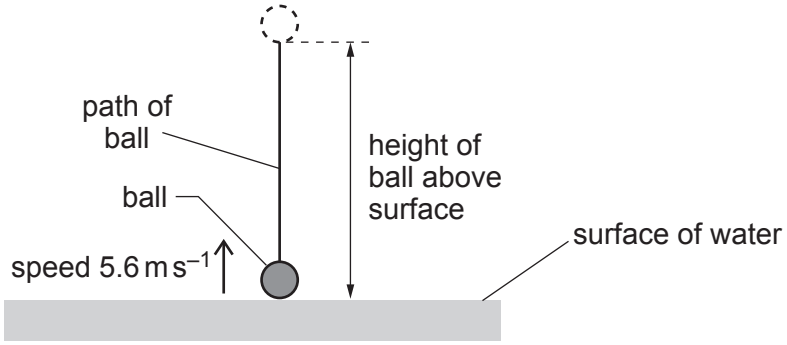


**Fig. 2.1**

The ball leaves the water surface with speed $5.6\,m\,s^{-1}$.

Assume that air resistance is negligible.

**(i)** Calculate the maximum height reached by the ball above the surface of the water.

height = ..... m [2]

© UCLES 2020

**(ii)** The ball leaves the water at time $t = 0$ and reaches its maximum height at time $t = T$.

On Fig. 2.2, sketch a graph to show the variation of the speed of the ball with time $t$ from $t = 0$ to $t = T$. Numerical values are **not** required.

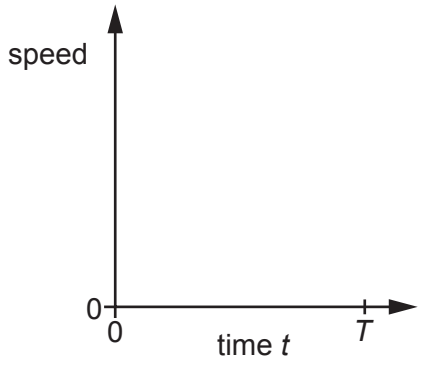


**Fig. 2.2**

[1]

**(iii)** The mass of the ball is 0.45 kg.

Use your answer in **(b)(i)** to calculate the change in gravitational potential energy of the ball as it rises from the surface of the water to its maximum height.

change in gravitational potential energy = ..... J [2]

**(iv)** State and explain the variation in the magnitude of the acceleration of the ball as it falls back towards the surface of the water if air resistance is **not** negligible.

.....

.....

.....

.....

..... [2]

[Total: 9]

© UCLES 2020

**3** **(a)** State what is meant by *work done*.

.....

.....

..... [1]

**(b)** A skier is pulled along horizontal ground by a wire attached to a kite, as shown in Fig. 3.1.

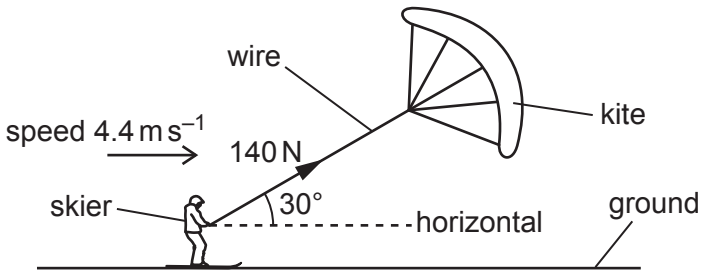


**Fig. 3.1** (not to scale)

The skier moves in a straight line along the ground with a constant speed of 4.4 m s$^{-1}$. The wire is at an angle of 30° to the horizontal. The tension in the wire is 140 N.

**(i)** Calculate the work done by the tension to move the skier for a time of 30 s.

work done = ..... J [3]

**(ii)** The weight of the skier is 860 N. The vertical component of the tension in the wire and the weight of the skier combine so that the skier exerts a downward pressure on the ground of 2400 Pa.

Determine the total area of the skis in contact with the ground.

area = ..... m$^2$ [3]

© UCLES 2020

**(iii)** The wire attached to the kite is uniform. The stress in the wire is $9.6 \times 10^6$ Pa.

Calculate the diameter of the wire.

diameter = ..... m [2]

**(c)** The variation with extension $x$ of the tension $F$ in the wire in **(b)** is shown in Fig. 3.2.

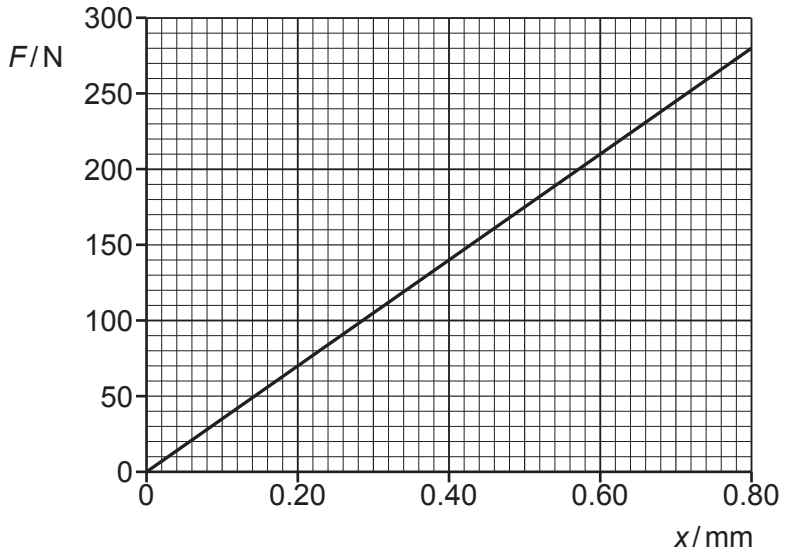


**Fig. 3.2**

A gust of wind increases the tension in the wire from 140 N to 210 N.

Calculate the change in the strain energy stored in the wire.

change in strain energy = ..... J [3]

[Total: 12]

**4** **(a)** For a progressive wave, state what is meant by:

**(i)** the *wavelength*

.....

..... [1]

**(ii)** the *amplitude*.

.....

..... [1]

**(b)** A beam of red laser light is incident normally on a diffraction grating.

**(i)** Diffraction of the light waves occurs at each slit of the grating. The light waves emerging from the slits are coherent.

Explain what is meant by:

**1.** *diffraction*

.....

..... [1]

**2.** *coherent*.

.....

..... [1]

**(ii)** The wavelength of the laser light is 650 nm. The angle between the **third** order diffraction maxima is 68°, as illustrated in Fig. 4.1.

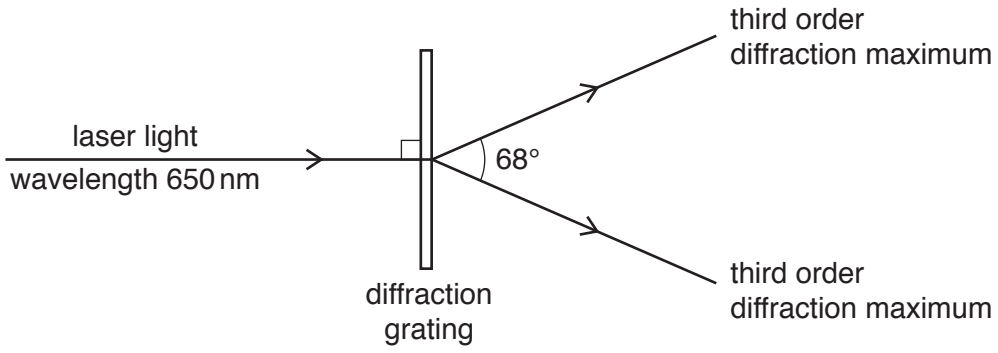


**Fig. 4.1** (not to scale)

Calculate the separation $d$ between the centres of adjacent slits of the grating.

$d$ = ..... m [3]

**(iii)** The red laser light is replaced with blue laser light.

State and explain the change, if any, to the angle between the third order diffraction maxima.

.....

.....

..... [2]

[Total: 9]

**5** **(a)** Define the *ohm*.

.....

.....

..... [1]

**(b)** A wire has a resistance of 1.8 Ω. The wire has a uniform cross-sectional area of 0.38 $mm^2$ and is made of metal of resistivity $9.6 \times 10^{-7}$ Ω m.

Calculate the length of the wire.

length = ..... m [3]

**(c)** A resistor X of resistance 1.8 Ω is connected to a resistor Y of resistance 0.60 Ω and a battery P, as shown in Fig. 5.1.

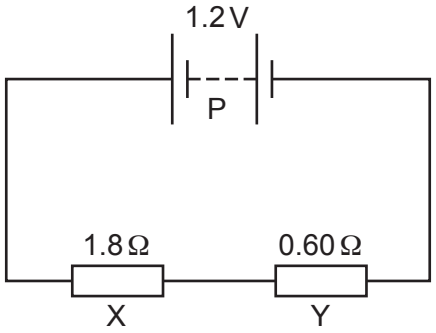


**Fig. 5.1**

The battery P has an electromotive force (e.m.f.) of 1.2 V and negligible internal resistance.

**(i)** Explain, in terms of energy, why the potential difference (p.d.) across resistor X is less than the e.m.f. of the battery.

.....

.....

..... [1]

**(ii)** Calculate the potential difference across resistor X.

potential difference = ..... V [2]

© UCLES 2020

**(d)** Another battery Q of e.m.f. 1.2 V and negligible internal resistance is now connected into the circuit of Fig. 5.1 to produce the new circuit shown in Fig. 5.2.

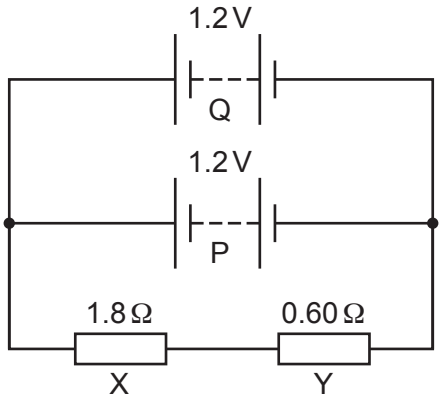


**Fig. 5.2**

State whether the addition of battery Q causes the current to decrease, increase or remain the same in:

**(i)** resistor X ..... [1]

**(ii)** battery P. ..... [1]

**(e)** The circuit shown in Fig. 5.2 is modified to produce the new circuit shown in Fig. 5.3.

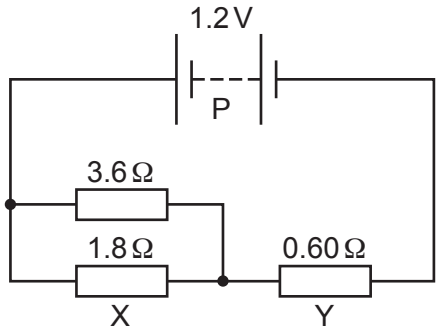


**Fig. 5.3**

Calculate:

**(i)** the total resistance of the two resistors connected in parallel

resistance = ..... Ω [1]

**(ii)** the current in resistor Y.

current = ..... A [2]

[Total: 12]

© UCLES 2020

**6** A uniform electric field is produced between two parallel metal plates. The electric field strength is $1.4 \times 10^4\,\text{N C}^{-1}$. The potential difference between the plates is 350 V.

**(a)** Calculate the separation of the plates.

separation = ..... m [2]

**(b)** A nucleus of mass $8.3 \times 10^{-27}$ kg is now placed in the electric field. The electric force acting on the nucleus is $6.7 \times 10^{-15}$ N.

**(i)** Calculate the charge on the nucleus in terms of *e*, where *e* is the elementary charge.

charge = ..... *e* [3]

**(ii)** Calculate the mass, in u, of the nucleus.

mass = ..... u [1]

**(iii)** Use your answers in **(b)(i)** and **(b)(ii)** to determine the number of neutrons in the nucleus.

number = ..... [1]

[Total: 7]

© UCLES 2020

**7** **(a)** State and explain whether a neutron is a fundamental particle.

.....

..... [1]

**(b)** A proton in a stationary nucleus decays.

**(i)** State the **two** leptons that are produced by the decay.

.....

..... [2]

**(ii)** Part of the energy released by the decay is given to the two leptons.

State **two** possible forms of the remainder of the released energy.

.....

..... [2]

[Total: 5]

© UCLES 2020

**BLANK PAGE**

Permission to reproduce items where third-party owned material protected by copyright is included has been sought and cleared where possible. Every reasonable effort has been made by the publisher (UCLES) to trace copyright holders, but if any items requiring clearance have unwittingly been included, the publisher will be pleased to make amends at the earliest possible opportunity.

To avoid the issue of disclosure of answer-related information to candidates, all copyright acknowledgements are reproduced online in the Cambridge Assessment International Education Copyright Acknowledgements Booklet. This is produced for each series of examinations and is freely available to download at www.cambridgeinternational.org after the live examination series.

Cambridge Assessment International Education is part of the Cambridge Assessment Group. Cambridge Assessment is the brand name of the University of Cambridge Local Examinations Syndicate (UCLES), which itself is a department of the University of Cambridge.

© UCLES 2020